Toyota Lancruiser HDJ80
12V charge / 24V start system

R. Gozdzikowski, London,
Ver 1.7 - 24/05/2002
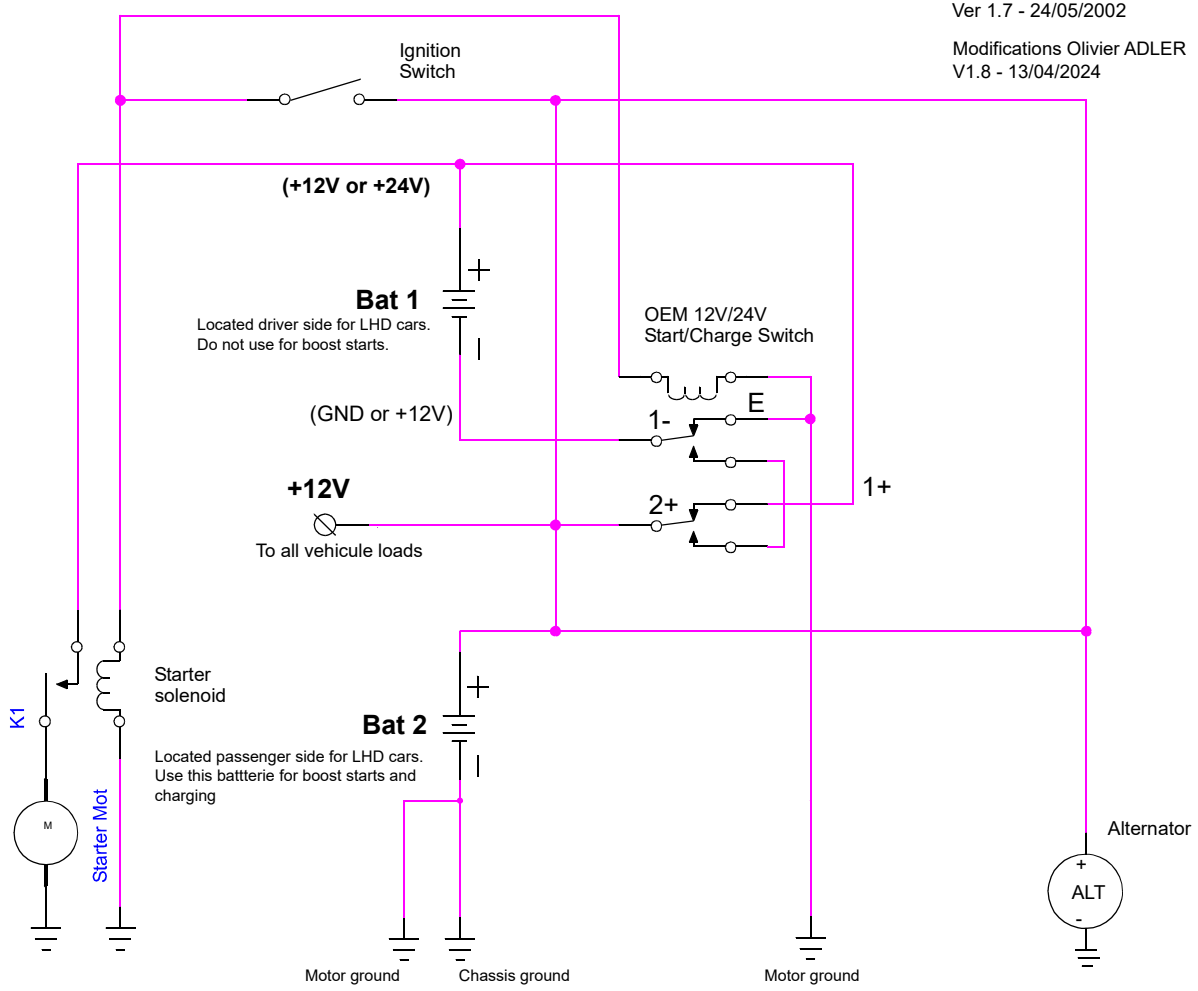
Modifications Olivier ADLER
V1.8 - 13/04/2024